Crawler Tractors

PR 736 Litronic® PR 746 Litronic® PR 756 Litronic®

Operating Weight:
20,300 – 24,600 kg / 44,750 – 54,230 lb
28,300 – 30,800 kg / 62,370 – 67,900 lb
38,300 – 41,150 kg / 84,430 – 90,720 lb

Engine Output:

SAE J1349	ISO 9249
150 kW / 201 HP	**150 kW / 204 HP**
185 kW / 248 HP	**185 kW / 252 HP**
250 kW / 336 HP	**250 kW / 340 HP**
Tier 4f	**EU Stage IV**

LIEBHERR

Performance

Outstanding pushing and ripping performance

PR 736 Litronic

Engine (ISO 9249):
150 kW / 204 HP
Tier 4f / EU Stage IV
Engine (SAE J1349):
150 kW / 201 HP
Tier 4f / EU Stage IV
Operating weight:
20,300 – 24,600 kg
44,750 – 54,230 lb
Blade capacity:
4.10 – 5.56 m^3
5.36 – 7.27 yd^3
Hydrostatic travel drive
with electronic control unit

PR 746 Litronic

Engine (ISO 9249):
185 kW / 252 HP
Tier 4f / EU Stage IV
Engine (SAE J1349):
185 kW / 248 HP
Tier 4f / EU Stage IV
Operating weight:
28,300 – 30,800 kg
62,370 – 67,900 lb
Blade capacity:
6.00 – 7.20 m^3
7.85 – 9.42 yd^3
Hydrostatic travel drive
with electronic control unit

PR 756 Litronic

Engine (ISO 9249):
250 kW / 340 HP
Tier 4f / EU Stage IV
Engine (SAE J1349):
250 kW / 336 HP
Tier 4f / EU Stage IV
Operating weight:
38,300 – 41,150 kg
84,430 – 90,720 lb
Blade capacity:
8.92 – 11.70 m^3
11.67 – 15.3 yd^3
Hydrostatic travel drive
with electronic control unit

Efficiency
Cost efficiency
comes standard

Reliability
Robust design
in every regard

Comfort
Ample space, ergonomics
and comfort – All in one

Maintainability
Simple maintenance and an
extensive service network

Performance

Outstanding pushing and ripping performance

Power and innovative technology are the hallmarks of Liebherr crawler tractors. Whether they are used for heavy ripping work, moving material or fine-grading, Generation 6 crawler dozers are powerful machines for every application.

High productivity

Powerful engines …
Liebherr diesel engines are designed for the harsh conditions of construction sites and provide the right amount of power in every situation. Depending on the job requirements, different operating modes are available for maximum power or fuel-saving operation.

… and an intelligent drive system
The hydrostatic travel drive operates smoothly and automatically adjusts the working speed to the load conditions. The engine's power is always transmitted to both tracks without interruption. This permits exact and powerful steering; track slip is minimized and operators can concentrate completely on their work.

Safe on every terrain
The drive components have been placed to provide a very low center of gravity while still ensuring maximum ground clearance. Together with solid belly pans this permits safe, reliable operation when performing challenging work on slopes and embankments. For even better traction, the PR 756 undercarriage can be configured with bogie suspension.

Precise control

Excellent maneuverability
When working in tight areas, the hydrostatic travel drive offers an additional benefit. All steering motions – including turning on the spot – are fast and effortless. In ripping work, the ripper can be positioned precisely between hard layers of rock and break out the material with ease.

Outstanding grading attributes
Crawler dozers in the mid-sized class provide maximum versatility. Generation 6 crawler dozers from Liebherr offer an exceptionally smooth ride, precision blade control and a perfect view of the blade. This ensures maximum productivity both when pushing heavy material and when fine-grading.

Automatic machine control
2-D or 3-D machine control is becoming increasingly indispensable to enhance the productivity of the operator and machine. Thanks to their stepless drive concept, Liebherr crawler dozers are ideal for this type of machine control. Factory-installed preparation kits are offered for all common system suppliers, giving customers maximum flexibility when selecting the control system that best meets their needs.

Liebherr-Hydrostatic drive
- Automatic speed and torque adjustment optimizes the transmission of the engine power to the tracks as the load changes.
- The high efficiency of the hydrostatic drive is available over almost the entire speed range. The drive's capabilities are especially beneficial when performing heavy pushing and ripping work.

Intelligent engine control
- The electronically modelled power and torque curves ensure outstanding pushing power and a dynamic response to increasing loads.
- On-demand power boost assures adequate power reserves, even under the most difficult working conditions.

Precise fine grading
- Long tracks and an extremely rigid oscillating bar keep the machine well balanced.
- The precise working hydraulics and perfect matching of equipment and base machine provide optimal blade control at all times.

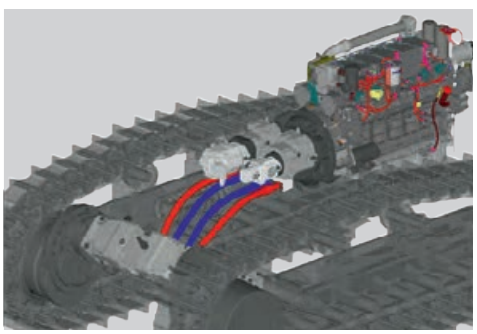

Efficiency

Cost efficiency comes standard

Liebherr crawler tractors are designed from the ground up with economy in mind. A highly efficient drive concept, components with long service lives and low maintenance requirements reduce operating costs – and increase your profits.

Unrivalled economy

The latest engine and exhaust technology
The newest generation of Liebherr diesel engines complie with Emission Stage IV/Tier 4 final. SCR technology: the exhaust gas undergoes selective catalytic reduction through injection of urea (DEF, AdBlue®). A diesel particulate filter is not required. As a result, the engine operates in a temperature range of maximum efficiency. The constant, low engine speed, in combination with common rail injection, ensures optimized cylinder charging and, in turn, even more efficient fuel combustion.

Highly efficient driveline
The high efficiency of the hydrostatic drive extends over almost the entire speed range. The engine's power is transmitted with minimum loss and fuel consumption is further reduced.

Lower CO_2 emissions
With exhaust emission values that comply with the most stringent legislation and even greater fuel economy than that of previous models, Liebherr Generation 6 crawler dozers sets new environmental standards by minimizing their "ecological footprint".

Optimized for every job

A variety of track options
Thanks to various track sizes and track shoe options offered, Liebherr crawler tractors can be ideally configured for specific operating conditions. They are well suited for rough terrain, steep slopes or soft ground.

Undercarriage with rotary bushings
As the perfect feature when working on very abrasive ground, Liebherr offers tracks with free-turning bushings (FTB). The large, rotating bushings minimize track and sprocket wear; in addition, chain links and rollers have even more wear material. This extends the service life of the entire undercarriage considerably in these specific applications.

Equipment for special applications
Applications such as handling of coal, wood chips or waste place enormous demands on crawler tractors. Specially developed equipment kits ensure maximum productivity and a long service life, even under these harsh operating conditions.

Eco-Mode

- The Eco-Mode setting reduces the engine speed at the push of a button while maintaining the necessary power and lowering fuel consumption. Ideal for light- and medium-duty applications.
- If the machine idles for an extended period of time, the engine can shut down automatically and avoid wasting fuel needlessly.

PR 736 with 6-way blade

- Material deposition, filling up trenches, creating embankments or finish grading: the 6-way blade gives the PR 736 maximum versatility.
- The optional blade with hinged corners limits the transport width to 10 feet (3 meters). Transporting the machine is fast and inexpensive.

Always informed with LiDAT

- The Liebherr LiDAT data transmission and positioning system contributes to effective fleet management.
- Utilizing the latest communication technology, LiDAT provides comprehensive operational data, allowing economical machine management, optimized resources, and remote monitoring.

Reliability

Robust design in every regard

Today's construction sites require machines with maximum versatility and ruggedness. Crawler dozers from Liebherr meet these requirements in an ideal manner: Thanks to components designed specifically for construction machinery, proven technology and innovative customer-specific solutions, you can expect maximum availability.

Liebherr driveline

Reliable engines
Diesel engines from Liebherr have powered construction machinery around the world for decades. Developed for the harshest operating conditions, their rugged construction and low nominal operating speed guarantee maximum reliability and a long service life.

Wear-free drive concept
The proven Liebherr hydrostatic travel drive does not need components such as a torque converter, manual gearbox, differential steering or steering clutches. The high-quality hydraulic pumps and motors operate reliably and practically without wear.

Long-lasting final drives
The large final drives used in the Generation 6 crawler dozers are extremely robust and designed for the heaviest loads. Double mechanical seals with monitoring for leaks ensure reliable operation.

Rugged design

Main frame with a proven box-section design
The main frame is built using a proven box-section design, which provides maximum torsional resistance and optimal absorption of forces. Cast steel is used for components subject to high stress.

Optimized equipment
L-shaped, welded push frames offer maximum strength and precise blade control. High-strength steel blades and optional, additional wear plates ensure a long service life. All ripper types are designed for heavy-duty ripping work, and areas exposed to wear are given special protection.

An intelligent cooling system
Hydraulically driven fans are activated as needed to regulate the operating temperature independently of the engine's speed. This guarantees short warm-up times and reliable cooling – even in extremely dusty surroundings. For especially critical operating conditions, a fan that reverses automatically can be provided.

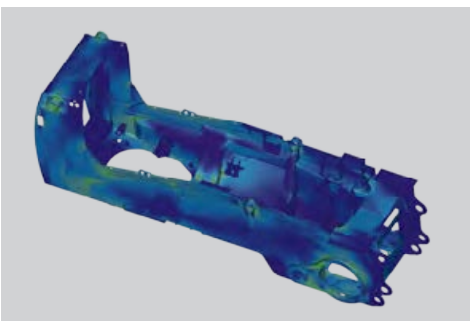

From the screen to the construction site
- Optimized layout: at the development stage components are designed with state-of-the-art software tools.
- Extensive test bench runs are the next important step in the development process.
- Long-term field tests under rigorous conditions ensure maximum machine availability.

Key technologies from Liebherr
- Liebherr has decades of experience in developing, designing and manufacturing components and, as a result, offers maximum reliability.
- Important key components such as diesel engines, spiltterboxes, hydraulic pumps, hydraulic cylinders, final drives and electronics are manufactured in our own facilities, optimized for combined operation providing the highest quality.

Optimized track components
- Noticeably larger sprockets on the PR 736 and PR 746 ensure maximum wear resistance.
- The track tensioner is fully encapsulated and, as a result, ideally protected against material ingress.
- As a further measure, the temperature of the final drives is monitored continuously, which increases the operating reliability of the machine even more.

Comfort

Comfort, space and ergonomics: All in one

The completely redesigned working environment offers exceptional operator comfort. With its generous space, ergonomic layout and low sound levels, the Liebherr comfort cab provides the perfect conditions for fatigue-free and concentrated work.

Deluxe cab

Ergonomic and purposely designed
The well-thought-out design of the operator's cab provides the essential conditions for relaxed and productive work. All instruments and operating controls are carefully organized for easy reach. An unobstructed view of the work equipment and perfect all-round visibility allows the operator to concentrate fully on the task at hand.

Convenience in daily use
Carefully considered details such as a cooled storage compartment, additional footrests, adjustable joysticks and a powerful air conditioning system improve the operator's comfort and boost daily productivity.

Quiet and dust-free
Thanks to effective sound insulation and modern, low-noise diesel engines, the PR 736, PR 746 and PR 756 feature extremely low noise levels that lie well below the legal limits. The pressurized cab keeps the operator's environment free of dust from the surroundings.

Simple and intuitive operation

Single-lever control
All driving functions can be controlled smoothly and precisely with only one operating lever – including the "turning on the spot" function. The travel joystick is optionally available in either a proportional or a detented version – this allows control to be matched optimally to the needs of the operator.

Safety-Plus comfort seat
The standard air-sprung seat adjusts perfectly to the operator and deactivates the machine automatically on exiting the cab.

The hydrostatic drive as service brake
The crawler tractor operates with continious power on both tracks even when driving on slopes. Thanks to the self-locking nature of the hydrostatic drive system, the operator can bring the machine to a stop at any time simply by returning the joystick to the "neutral" position – or by depressing the inching pedal. An automatically activated parking brake provides additional safety.

Individual set-up
- The intuitive touch-controlled screen conveniently displays all important operating data.
- At the push of a button, the operator can adjust a wide variety of machine settings – for example, the response of the travel drive – precisely to his needs.

Intuitive control
- The new, ergonomically shaped joysticks are adjustable forward and back.
- 3 speeds can be programmed individually.
- In addition, an inching pedal is available. It can be operated with or without lowering the engine speed – perfect customization for the operator.

Unrivalled visibility
- A plus for safety: larger panoramic windows, downward-sloping edges all-round and the integrated ROPS/FOPS protection give the operator unmatched all-round visibility.
- Greater productivity: thanks to a higher seat position, wider doors and optimized engine covers, the operator always has an excellent view of the work equipment.

Maintainability

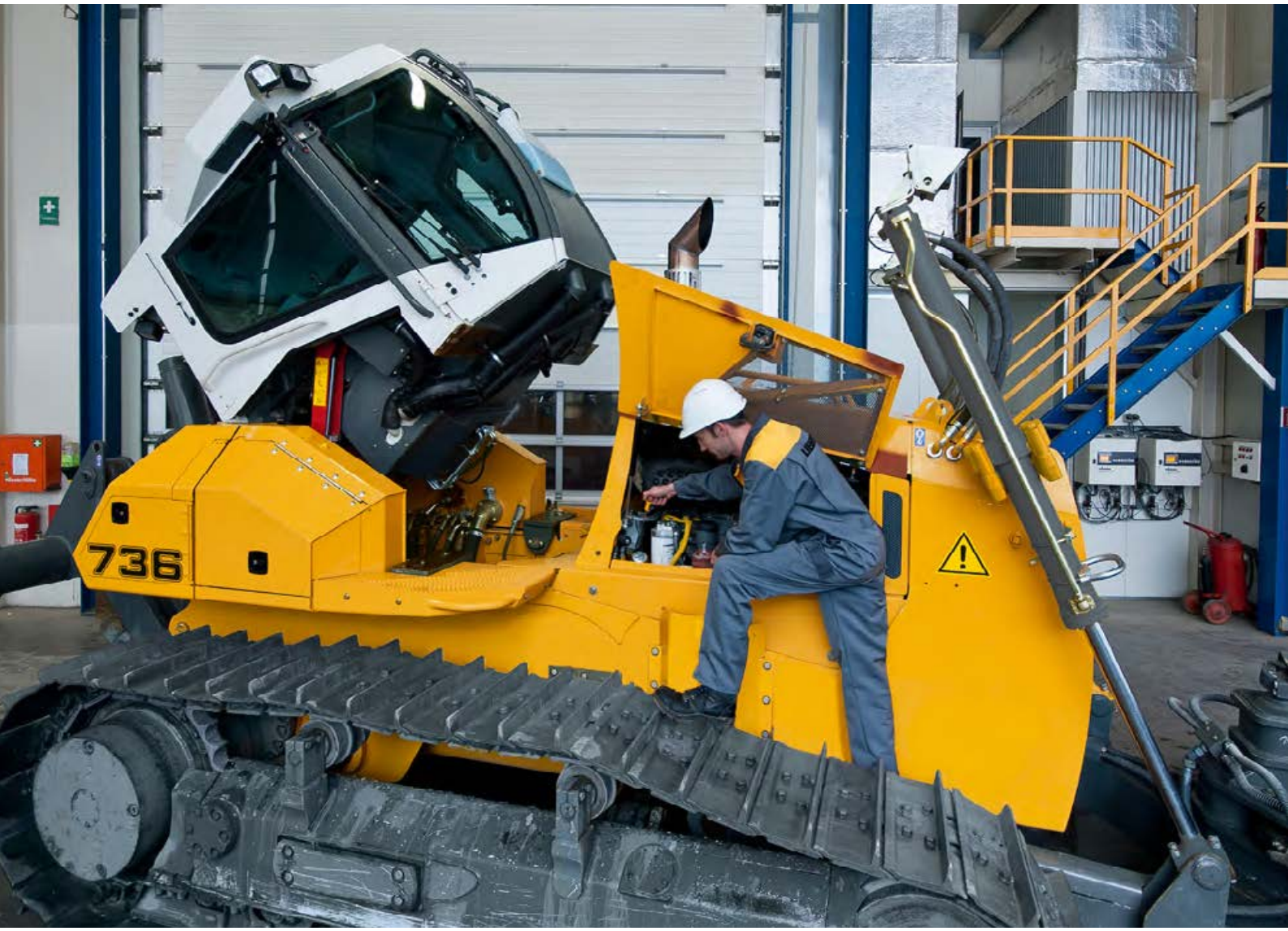

Simple maintenance and an extensive service network

Thanks to their minimal maintenance requirements, Liebherr crawler tractors make a reliable contribution to your economic success. A dense service network means short distances, efficient structures and fast response times for the user.

Cost-effective maintenance

Simple daily checks
All checkpoints during daily routine inspections are readily accessible on one side of the engine. The hydraulically tilted cab provides easy access to components as well. Service work can be performed quickly and efficiently.

Long maintenance intervals
The maintenance intervals are optimally matched to the individual components. Maintenance-free mountings are often used in exposed areas. Hydraulic oil change intervals of up to 8,000 operating hours reduce costs and minimize downtime.

Optimal planning

Planned costs
Liebherr crawler dozers come with extensive standard warranties for the entire machine and the drive train. Customized inspection and service programs allow optimal planning of all maintenance activities.

Remanufacturing
The Liebherr remanufacturing program offers cost-effective reconditioning of components to the highest quality standards. Various reconditioning levels are available: replacement components, general overhaul or repair. The customer receives components with original part quality at a reduced cost.

Our focus is on the customer

Competent advice and service
Competent advice is a given at Liebherr. Experienced specialists provide decision-guidance for your specific requirements: application-oriented sales support, service agreements, original parts management, as well as remote data transmission for machine planning and fleet management.

Continuous dialogue with users
We utilize the expert knowledge and practical experience of our customers to consistently optimize our machines and services – real solutions for real situations.

Easy access
- All service points are centrally located and easily accessible. Thanks to wide-opening access doors, the daily inspection of the machine is simple and time-saving.
- Lubrication points for the oscillating bar bearings are easily reached in the engine compartment.
- The standard lighting of the engine area simplifies maintenance and inspection.

Tilt-out cooling fan
- In especially dusty applications, the swing-out fan in Generation 6 crawler tractors contributes significantly to easy cleaning of the cooling system. The radiator grille requires no tools to open.
- The additional hydraulic oil cooler fan at the rear of models PR 746 and PR 756 is also hinged.

Expedited spare parts service
- 24-hour delivery: Spare parts service is available for our dealers around the clock.
- Electronic spare parts catalogue: Fast and reliable selection and ordering via the Liebherr online portal.
- With online tracking, the current processing status of your order can be viewed at any time.

Technical Data PR 736

Engine

Liebherr Diesel engine	D 934 A7 Emission regulations according to 97/68/EC, 2004/26/EC Stage IV, EPA/CARB Tier 4f
Rated power (net)	
ISO 9249	150 kW/204 HP
SAE J1349	150 kW/201 HP
Maximum power (net)	
ISO 9249	175 kW/238 HP
SAE J1349	175 kW/235 HP
Rated speed	1,800 rpm
Displacement	7.0 l/427 in³
Design	4 cylinder in-line engine, water-cooled, turbocharged, air-to-air intercooler
Injection system	Direct fuel injection, Common Rail, electronic control
Lubrication	Pressurized lube system, engine lubrication guaranteed for inclinations up to 45°, on all sides
Operating voltage	24 V
Alternator	140 A
Starter	7.8 kW/11 HP
Batteries	2 x 180 Ah/12 V
Air cleaner	Dry-type air cleaner with pre-cleaner, main and safety elements, control light in the operator's cab
Cooling system	Combi radiator, comprising radiators for water, hydraulic fluid, charge air. Hydrostatic fan drive

Hydraulics

Hydraulic system	Load sensing (demand-controlled)
Pump type	Swash plate piston pump
Pump flow max.	207 l/min./54.7 gpm
Pressure limitation	260 bar/3,770 psi (6-way blade) 200 bar/2,900 psi (Straight blade)
Control valve	2 segments, expandable to 4
Filter system	Return filter with magnetic rod in the hydraulic tank
Control	Single joystick for all blade functions

Travel Drive, Control

Transmission system	Infinitely variable hydrostatic travel drive, independent drive for each track
Travel speed*	Continuously variable
Speed range 1 (reverse):	0 – 4.0 km/h/2.5 mph (4.5 km/h/2.8 mph)
Speed range 2 (reverse):	0 – 6.0 km/h/3.7 mph (8.0 km/h/4.9 mph)
Speed range 3 (reverse):	0 – 11.0 km/h/6.8 mph (11.0 km/h/6.8 mph)
	*Travel speed ranges can be set on the travel joystick (memory function)
Travel speed*	
Minimum speed setting:	0 – 1.0 mph
Maximum speed setting:	0 – 6.8 mph
Pre-set speed:	0 – 2.8 mph
	*Travel speeds can be set on the travel joystick
Electronic control	The electronic system automatically adjusts travel speed and drawbar pull to match changing load conditions
Steering	Hydrostatic
Service brake	Hydrostatic (self-locking), wear-free
Parking brake	Multi-disk brake, wear-free, automatically applied with neutral joystick position
Cooling system	Hydraulic oil cooler integrated in combi radiator, hydrostatic fan drive
Filter system	Micro cartridge filters in replenishing circuit
Final drive	Combination spur gear with planetary gear, double-sealed (duo cone seals) with temperature control
Control	Single joystick with inch brake pedal for all travel and steering functions. Optional: detented joystick, with inching pedal

Operator's Cab

Cab	Resiliently mounted cab with positive pressure ventilation, can be tilted with hand pump 40° to the rear. With integrated ROPS Rollover Protective Structure (EN ISO 3471) and FOPS Falling Objects Protective Structure (EN ISO 3449)
Operator's seat	Air-suspended comfort seat, fully adjustable
Monitoring	Touch screen: display of current machine information, automatic monitoring of operating conditions. Individual setting of machine parameters

Technical Data PR 736

Undercarriage

	L	XL	LGP
Design	Undercarriage with rigid bottom rollers		
Mounting	Via separate pivot shafts and equalizer bar		
Track chains	Lubricated, single-grouser shoes, tensioning via a steel spring and grease tensioner		
Links, each side	41	45	45
Track rollers, each side	7	7	7
Carrier rollers, each side	2	2	2
Sprocket segments, each side	6	6	6
Track shoes, standard	610 mm/24"	610 mm/24"	711 mm/28" 812 mm/32"
Track shoes, optional	560 mm/22"	560 mm/22"	914 mm/36" 965 mm/38"

Sound Emissions

Operator sound exposure ISO 6396	L_{pA} = 75 dB(A) (in the cab)
Exterior sound pressure 2000/14/EC	L_{WA} = 111 dB(A) (to the environment)

Refill Capacities

Fuel tank	430 l/113.6 gal
Diesel Exhaust Fluid (DEF) tank	50 l/ 13.2 gal
Cooling system	41 l/ 10.8 gal
Engine oil, with filter	29 l/ 7.7 gal
Splitter box	5.5 l/ 1.5 gal
Hydraulic tank	111 l/ 29.3 gal
Final drive L, XL (outside push frame), each side	15 l/ 4 gal
Final drive XL (inside push frame), each side	22 l/ 5.8 gal
Final drive LGP, each side	26.5 l/ 7 gal

Drawbar Pull

Max.	312 kN
at 1.5 km/h / 0.9 mph	275 kN
at 3.0 km/h / 1.9 mph	154 kN
at 6.0 km/h / 3.7 mph	77 kN
at 9.0 km/h / 5.6 mph	51 kN

Dimensions PR 736

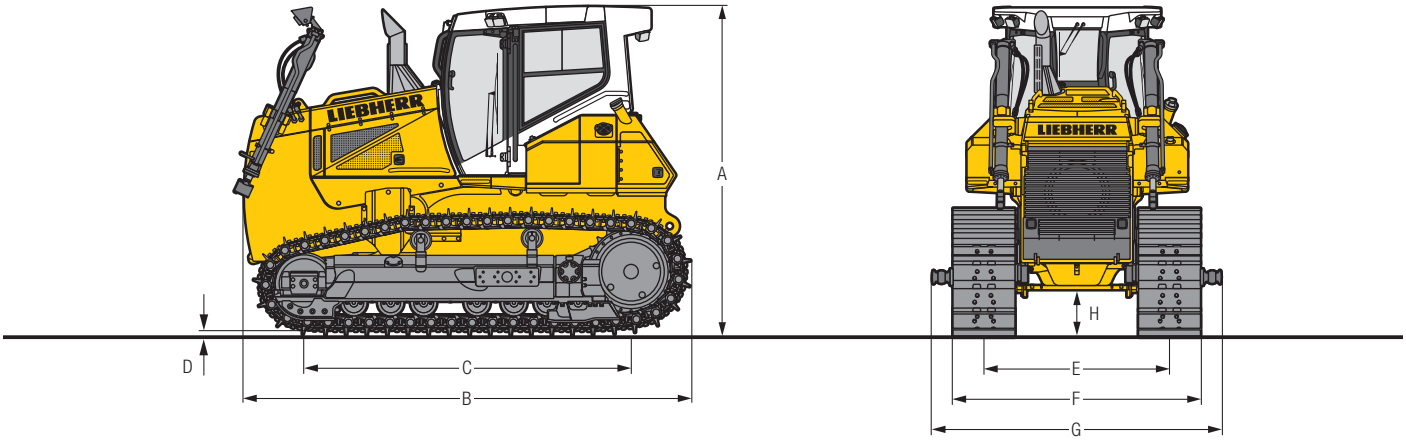

Dimensions

	Push frame		outside	inside	outside	inside	outside
	Undercarriage		**L**	**XL**	**XL**	**LGP**	**LGP**
A	**Height over cab**	**mm**	3,248	3,248		3,248	
		ft in	10'8"	10'8"0		10'8"	
B	**Overall length without attachments**	**mm**	4,428	4,428		4,428	
		ft in	14'6"	14'6"		14'6"	
C	**Length of track on ground**	**mm**	2,833	3,237		3,237	
		ft in	9'4"	10'7"		10'7"	
D	**Height of grousers**	**mm**	65	65		65	
		in	2.5"	2.5"		2.5"	
H	**Ground clearance**	**mm**	511	511		511	
		ft in	1'8"	1'8"		1'8"	
E	**Track gauge**	**mm**	1,830	2,180	1,830	2,290	2,180
		ft in	6'0"	7'2"	6'0"	7'6"	7'2"
G	**Width over trunnions**	**mm**	2,724	–	2,724	–	3,474
		ft in	8'11"		8'11"		11'5"
	Track shoes 560 mm / 22"						
F	Width over tracks	**mm / ft in**	2,390 / 7'10"	2,740 / 9'	2,390 / 7'10"	–	–
	Tractor shipping weight [1]	**kg / lb**	17,571 / 38,737	18,196 / 40,115	18,271 / 40,281		
	Track shoes 610 mm / 24"						
F	Width over tracks	**mm / ft in**	2,440 / 8'0"	2,790 / 7'10"	2,440 / 8'0"	–	–
	Tractor shipping weight [1]	**kg / lb**	17,699 / 39,020	18,335 / 40,422	18,410 / 40,587		
	Track shoes 711 mm / 28"						
F	Width over tracks	**mm / ft in**	–	–	–	3,000 / 9'10"	–
	Tractor shipping weight [1]	**kg / lb**				18,634 / 41,081	
	Track shoes 812 mm / 32"						
F	Width over tracks	**mm / ft in**	–	–	–	3,102 / 10'2"	2,992 / 9'10"
	Tractor shipping weight [1]	**kg / lb**				18,913 / 41,696	19,156 / 42,232
	Track shoes 914 mm / 36"						
F	Width over tracks	**mm / ft in**	–	–	–	–	3,094 / 10'2"
	Tractor shipping weight [1]	**kg / lb**					19,452 / 42,884
	Track shoes 965 mm / 38"						
F	Width over tracks	**mm / ft in**	–	–	–	–	3,145 / 10'4"
	Tractor shipping weight [1]	**kg / lb**					19,604 / 43,219

[1] Including coolant and lubricants, 20 % fuel, ROPS / FOPS cab.

Front Attachments PR 736

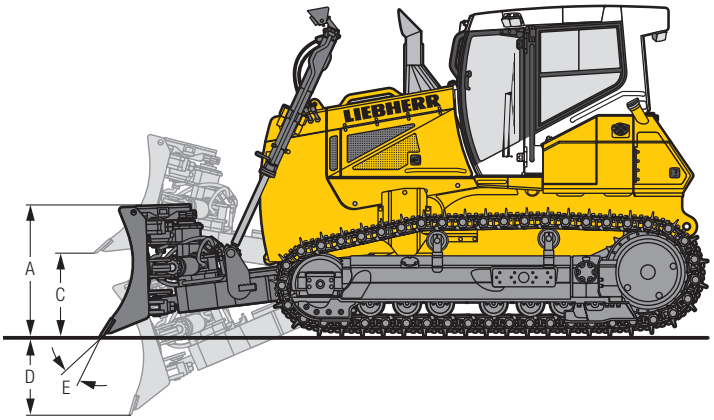

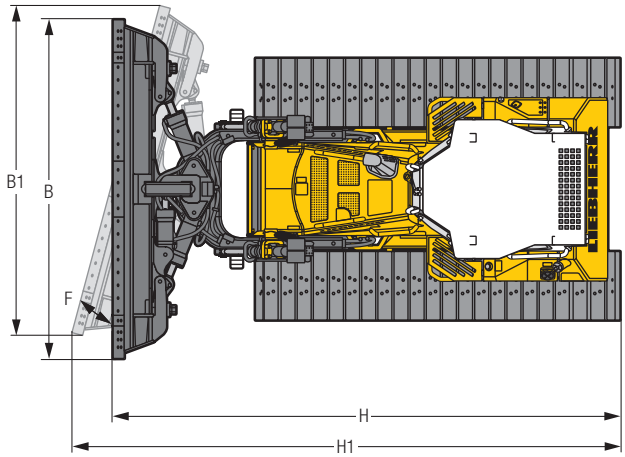

6-Way Blade with Inside Mounted Push Frame

			6-way blade	6-way blade with hinged corners	6-way blade	6-way blade with hinged corners
	Undercarriage		**XL**	**XL**	**LGP**	**LGP**
	Blade capacity, ISO 9246	**m³**	4.67	4.67	4.63	4.63
		yd³	6.11	6.11	6.06	6.06
A	**Height of blade**	**mm**	1,350	1,350	1,250	1,250
		ft in	4'5"	4'5"	4'1"	4'1"
B	**Width of blade**	**mm**	3,638	3,638	4,029	4,029
		ft in	11'11"	11'11"	13'3"	13'3"
B1	**Width of blade, angled**	**mm**	3,413	3,413	3,781	3,781
		ft in	11'2"	11'2"	12'5"	12'5"
	Transport width	**mm**	3,242	2,850	3,563	3,000 [2]
		ft in	10'8"	9'4"	11'8"	9'10"
C	**Lifting height**	**mm**	1,327	1,327	1,320	1,320
		ft in	4'4"	4'4"	4'4"	4'4"
D	**Digging depth**	**mm**	679	679	675	675
		ft in	2'3"	2'3"	2'3"	2'3"
E	**Blade pitch adjustment**		5°	5°	5°	5°
F	**Blade angle adjustment**		20°	20°	20°	20°
	Max. blade tilt	**mm**	545	545	606	606
		ft in	1'9"	1'9"	2'	2'
H	**Overall length, blade straight**	**mm**	6,077	6,077	6,060	6,060
		ft in	19'11"	19'11"	19'11"	19'11"
H1	**Overall length, blade angled**	**mm**	6,655	6,655	6,707	6,707
		ft in	21'10"	21'10"	22'0"	22'0"
	Track shoes 560 mm / 22"					
	Operating weight [1]	**kg / lb**	21,479 / 47,353	21,901 / 48,283	–	–
	Ground pressure [1]	**kg/cm² / psi**	0.59 / 8.39	0.60 / 8.53		
	Track shoes 610 mm / 24"					
	Operating weight [1]	**kg / lb**	21,618 / 47,659	22,040 / 48,590	–	–
	Ground pressure [1]	**kg/cm² / psi**	0.55 / 7.82	0.56 / 7.96		
	Track shoes 711 mm / 28"					
	Operating weight [1]	**kg / lb**	–	–	22,142 / 48,815	22,636 / 49,904
	Ground pressure [1]	**kg/cm² / psi**			0.48 / 6.83	0.49 / 6.97
	Track shoes 812 mm / 32"					
	Operating weight [1]	**kg / lb**	–	–	22,421 / 49,430	22,915 / 50,519
	Ground pressure [1]	**kg/cm² / psi**			0.43 / 6.11	0.44 / 6.26

[1] Including coolant and lubricants, 100 % fuel, ROPS / FOPS cab, operator, 6-way blade.
[2] Transport width 3,000 mm only with max. 711 mm (28") track pads.

Front Attachments PR 736

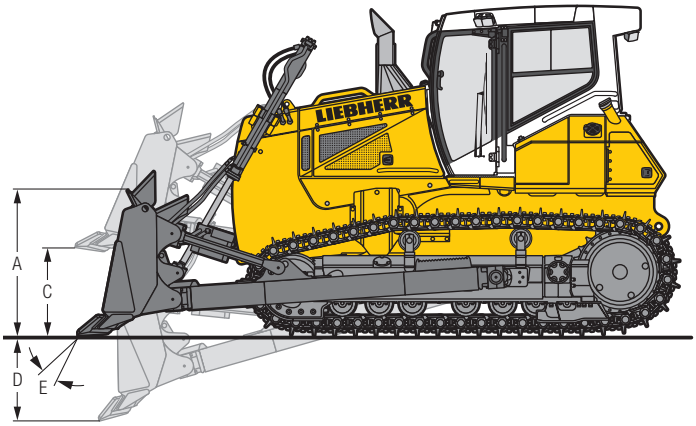

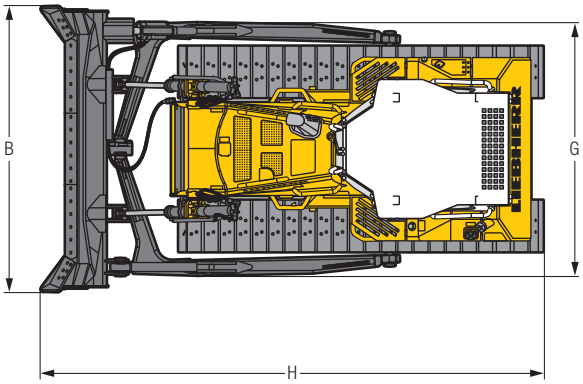

Semi-U Blade and Straight Blade

			Semi-U blade	Semi-U blade	Straight blade
	Undercarriage		**L**	**XL**	**LGP**
	Blade capacity, ISO 9246	**m³**	5.56	5.56	4.10
		yd³	7.27	7.27	5.36
A	**Height of blade**	**mm**	1,400	1,400	1,150
		ft in	4'7"	4'7"	3'9"
B	**Width of blade**	**mm**	3,372	3,372	3,995
		ft in	11'1"	11'1"	13'1"
C	**Lifting height**	**mm**	1,178	1,153	1,162
		ft in	3'10"	3'9"	3'10"
D	**Digging depth**	**mm**	528	574	579
		ft in	1'9"	1'11"	1'11"
E	**Blade pitch adjustment**		10°	10°	10°
	Max. blade tilt	**mm**	432	432	395
		ft in	1'5"	1'5"	1'4"
G	**Width over push frame**	**mm**	3,000	3,000	3,750
		ft in	9'10"	9'10"	12'4"
H	**Overall length**	**mm**	5,751	5,970	5,709
		ft in	18'10"	19'7"	18'9"
	Track shoes 560 mm / 22"				
	Operating weight [1]	**kg / lb**	20,511 / 45,219	21,040 / 46,385	–
	Ground pressure [1]	**kg/cm² / psi**	0.65 / 9.24	0.58 / 8.25	
	Track shoes 610 mm / 24"				
	Operating weight [1]	**kg / lb**	20,682 / 45,596	20,895 / 46,066	–
	Ground pressure [1]	**kg/cm² / psi**	0.60 / 8.53	0.53 / 7.54	
	Track shoes 812 mm / 32"				
	Operating weight [1]	**kg / lb**	–	–	22,125 / 48,777
	Ground pressure [1]	**kg/cm² / psi**			0.42 / 5.97
	Track shoes 914 mm / 36"				
	Operating weight [1]	**kg / lb**	–	–	22,421 / 49,430
	Ground pressure [1]	**kg/cm² / psi**			0.37 / 5.26
	Track shoes 965 mm / 38"				
	Operating weight [1]	**kg / lb**	–	–	22,573 / 49,765
	Ground pressure [1]	**kg/cm² / psi**			0.36 / 5.12

[1] Including coolant and lubricants, 100 % fuel, ROPS / FOPS cab, operator, semi-U or straight blade.

Rear Attachments PR 736

3-Shank Ripper

A	Ripping depth (max. / min.)	mm	512 / 362
		ft in	1'8" / 1'2"
B	Lifting height (max. / min.)	mm	676 / 526
		ft in	2'3" / 1'9"
C	Additional length, attachment raised	mm	1,128
		ft in	3'8"
D	Additional length, attachment lowered	mm	1,460
		ft in	4'9"
E	Overall beam width	mm	2,320
		ft in	7'7"
F	Distance between shanks	mm	1,000
		ft in	3'7"
	Max. pitch adjustment		–
	Weight	kg	1,919
		lb	4,231

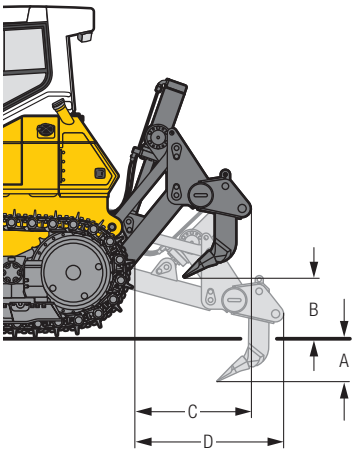

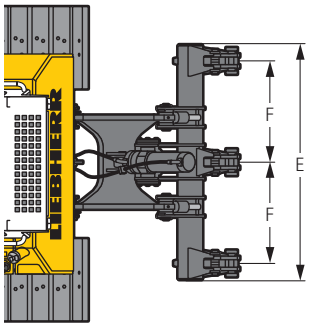

Drawbar

			rigid
A	Additional length	mm	427
		ft in	1'5"
B	Socket pin diameter	mm	50
		in	2"
C	Height of jaw	mm	518
		ft in	1'8"
D	Ground clearance	mm	430
		ft in	1'5"
	Jaw opening	mm	95
		in	3.7"
	Weight	kg	280
		lb	617

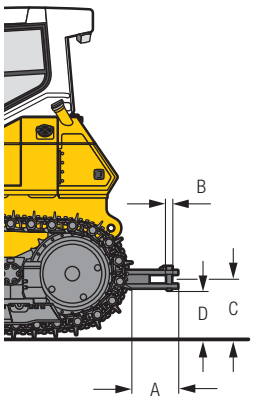

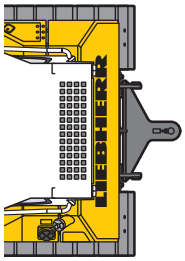

Technical Data PR 746

Engine

Liebherr Diesel engine	D 936 A7 Emission regulations according to 97/68/EC, 2004/26/EC Stage IV, EPA/CARB Tier 4f
Rated power (net)	
ISO 9249	185 kW/252 HP
SAE J1349	185 kW/248 HP
Maximum power (net)	
ISO 9249	210 kW/286 HP
SAE J1349	210 kW/281 HP
Rated speed	1,600 rpm
Displacement	10.5 l/641 in³
Design	6 cylinder in-line engine, water-cooled, turbocharged, air-to-air intercooler
Injection system	Direct fuel injection, Common Rail, electronic control
Lubrication	Pressurized lube system, engine lubrication guaranteed for inclinations up to 45°, on all sides
Operating voltage	24 V
Alternator	140 A
Starter	7.8 kW/11 HP
Batteries	2 x 180 Ah/12 V
Air cleaner	Dry-type air cleaner with pre-cleaner, main and safety elements, control light in the operator's cab
Cooling system	Combi radiator, comprising radiators for water and charge air. Hydrostatic fan drive

Travel Drive, Control

Transmission system	Infinitely variable hydrostatic travel drive, independent drive for each track
Travel speed*	Continuously variable
Speed range 1 (reverse):	0 – 4.0 km/h/2.5 mph (4.5 km/h/2.8 mph)
Speed range 2 (reverse):	0 – 6.0 km/h/3.7 mph (8.0 km/h/4.9 mph)
Speed range 3 (reverse):	0 – 11.0 km/h/6.8 mph (11.0 km/h/6.8 mph)
	* Travel speed ranges can be set on the travel joystick (memory function)
Travel speed*	
Minimum speed setting:	0 – 1.0 mph
Maximum speed setting:	0 – 6.8 mph
Pre-set speed:	0 – 2.8 mph
	* Travel speeds can be set on the travel joystick
Electronic system	The electronic system automatically adjusts travel speed and drawbar pull to match changing load conditions
Steering	Hydrostatic
Service brake	Hydrostatic (self-locking), wear-free
Parking brake	Multi-disc brake, wear-free, automatically applied with neutral joystick position
Cooling system	Separate oil cooler, hydrostatic fan drive
Filter system	Micro cartrigde filter in the replenishing circuit
Final drive	Combination spur gear with planetary gear, double-sealed (duo cone seals) with temperature indicator
Control	Proportional single joystick with inch brake pedal for all travel and steering functions

Hydraulics

Hydraulic system	Load sensing (demand controlled)
Pump type	Swash plate piston pump
Pump flow max.	256 l/min./67,6 gpm
Pressure limitation	260 bar/3,770 psi
Control valve	2 circuits, expandable to 4
Filter system	Return filter with magnetic rod in the hydraulic tank
Control	Single joystick for all blade functions

Operator's Cab

Cab	Resiliently mounted cab with positive pressure ventilation, can be tilted with hand pump 40° to the rear. With integrated ROPS Rollover Protective Structure (EN ISO 3471) and FOPS Falling Objects Protective Structure (EN ISO 3449)
Operator's seat	Air suspended comfort seat, fully adjustable
Monitoring	Touch screen: display of current machine information, automatic monitoring of operating conditions, individual setting of machine parameters

Technical Data PR 746

Undercarriage

	L	LGP
Design	Undercarriage with rigid bottom rollers	
Mounting	Via separate pivot shafts and equalizer bar	
Track chains	Lubricated, single-grouser shoes, tensioning via steel spring and grease tensioner	
Links, each side	41	44
Track rollers, each side	7	8
Carrier rollers, each side	2	2
Sprocket segments, each side	6	6
Track shoes, standard	610 mm / 24"	812 mm / 32"
Track shoes, optional	560 mm / 22" 711 mm / 28"	914 mm / 36"

Sound Emissions

Operator sound exposure ISO 6396	L_{pA} = 75 dB(A) (in the cab)
Exterior sound pressure 2000/14/EC	L_{WA} = 112 dB(A) (to the environment)

Refill Capacities

Fuel tank	505 l / 133.4 gal
Diesel Exhaust Fluid (DEF) tank	56.5 l / 14.9 gal
Cooling system	49 l / 12.9 gal
Engine oil, with filter	43 l / 11.4 gal
Splitter box	8.5 l / 2.2 gal
Hydraulic tank	112 l / 29.6 gal
Final drive L, each side	17 l / 4.5 gal
Final drive LGP, each side	18 l / 4.8 gal

Drawbar Pull

Max.	436 kN
at 1.5 km/h / 0.9 mph	385 kN
at 3.0 km/h / 1.9 mph	190 kN
at 6.0 km/h / 3.7 mph	95 kN
at 9.0 km/h / 5.6 mph	63 kN

Dimensions PR 746

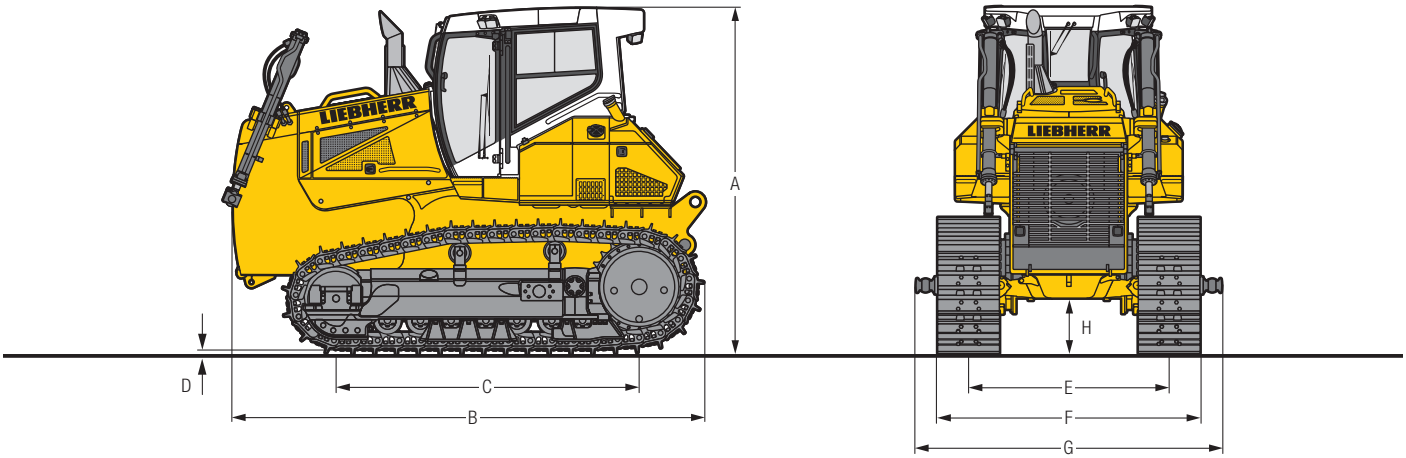

Dimensions

	Undercarriage		L	LGP
A	**Height over cab**	**mm**	3,430	3,430
		ft in	11'3"	11'3"
B	**Overall length without attachments**	**mm**	4,671	4,671
		ft in	15'4"	15'4"
C	**Length of track on ground**	**mm**	2,999	3,323
		ft in	9'10"	10'11"
D	**Height of grousers**	**mm**	71.5	71.5
		in	2.81"	2.81"
H	**Ground clearance**	**mm**	551	551
		ft in	1'10"	1'10"
E	**Track gauge**	**mm**	1,980	2,180
		ft in	6'6"	7'2"
G	**Width over trunnions**	**mm**	3,000	3,600
		ft in	9'10"	11'10"
	Track shoes 560 mm / 22"			
F	Width over tracks	**mm / ft in**	2,540 / 8'4"	–
	Tractor shipping weight [1]	**kg / lb**	21,644 / 47,717	
	Track shoes 660 mm / 26"			
F	Width over tracks	**mm / ft in**	2,590 / 8'6"	–
	Tractor shipping weight [1]	**kg / lb**	21,998 / 48,497	
	Track shoes 711 mm / 28"			
F	Width over tracks	**mm / ft in**	2,691 / 8'10"	–
	Tractor shipping weight [1]	**kg / lb**	22,705 / 50,056	
	Track shoes 812 mm / 32"			
F	Width over tracks	**mm / ft in**	–	2,992 / 9'10"
	Tractor shipping weight [1]	**kg / lb**		22,769 / 50,197
	Track shoes 914 mm / 36"			
F	Width over tracks	**mm / ft in**	–	3,094 / 10'2"
	Tractor shipping weight [1]	**kg / lb**		23,344 / 51,465

[1] Including coolant and lubricants, 20 % fuel, ROPS / FOPS cab.

Front Attachments PR 746

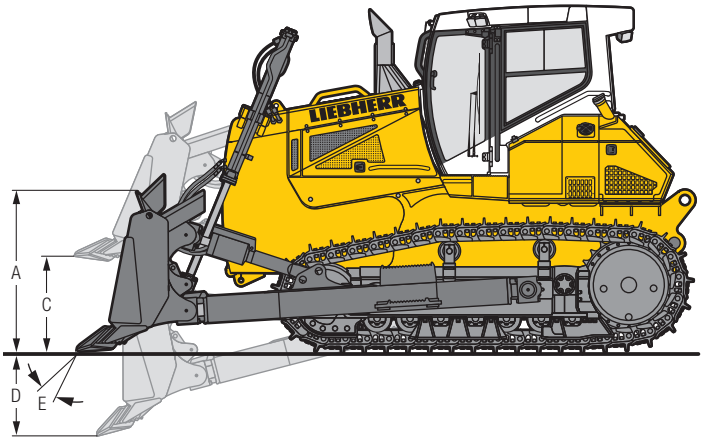

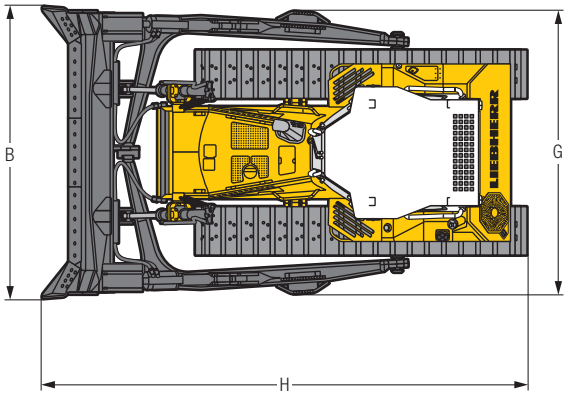

Semi-U Blade and Straight Blade

			Semi-U blade	Straight blade [2]
	Undercarriage		**L**	**LGP**
	Blade capacity, ISO 9246	**m³**	7.20	6.00
		yd³	9.42	7.85
A	**Height of blade**	**mm**	1,544	1,320
		ft in	5'1"	4'4"
B	**Width of blade**	**mm**	3,690	4,518
		ft in	12'1"	14'10"
C	**Lifting height**	**mm**	1,244	1,185
		ft in	4'1"	3'11"
D	**Digging depth**	**mm**	515	610
		ft in	1'8"	2'0"
E	**Blade pitch adjustment**		10°	10°
	Max. blade tilt	**mm**	562	567
		ft in	1'10"	1'10"
G	**Width over push frame**	**mm**	3,556	4,034
		ft in	11'8"	13'3"
H	**Overall length**	**mm**	6,129	5,955
		ft in	20'1"	19'6"
	Track shoes 560 mm / 22"			
	Operating weight [1]	**kg / lb**	25,886 / 57,069	–
	Ground pressure [1]	**kg/cm² / psi**	0.77 / 10.95	
	Track shoes 610 mm / 24"			
	Operating weight [1]	**kg / lb**	26,240 / 57,849	–
	Ground pressure [1]	**kg/cm² / psi**	0.72 / 10.24	
	Track shoes 711 mm / 28"			
	Operating weight [1]	**kg / lb**	26,947 / 59,408	–
	Ground pressure [1]	**kg/cm² / psi**	0.63 / 8.96	
	Track shoes 812 mm / 32"			
	Operating weight [1]	**kg / lb**	–	27,257 / 60,091
	Ground pressure [1]	**kg/cm² / psi**		0.51 / 7.25
	Track shoes 914 mm / 36"			
	Operating weight [1]	**kg / lb**	–	27,832 / 61,359
	Ground pressure [1]	**kg/cm² / psi**		0.46 / 6.54

[1] Including coolant and lubricants, 100 % fuel, ROPS / FOPS cab, operator, semi-U or straight blade.
[2] Rear equipment or counterweight is recommended.

Rear Attachments PR 746

1-Shank Ripper

	Parallelogram		hydraulic pitch adjustment
A	Ripping depth (max. / min.)	mm	900 / 570
		ft in	2'11" / 1'10"
B	Lifting height (max. / min.)	mm	638 / 308
		ft in	2'1" / 1'0"
C	Additional length, attachment raised	mm	1,509
		ft in	4'11"
D	Additional length, attachment lowered	mm	1,876
		ft in	6'2"
E	Overall beam width	mm	1,360
		ft in	4'6"
F	Distance between shanks	mm	–
		ft in	
	Max. pitch adjustment		25°
	Weight	kg	2,730
		lb	6,019

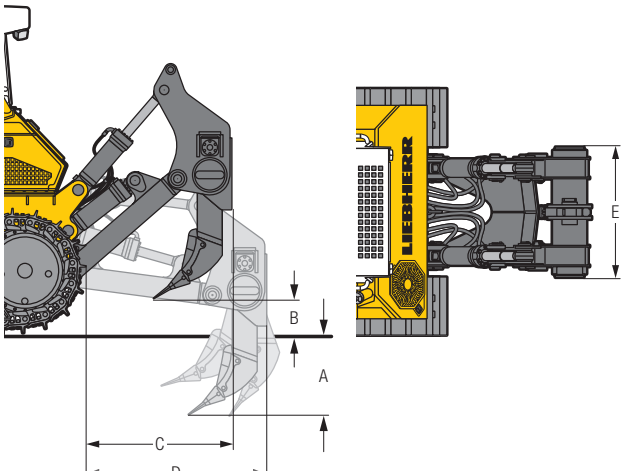

3-Shank Ripper

	Parallelogram		standard	hydraulic pitch adjustment
A	Ripping depth (max. / min.)	mm	743 / 443	743 / 443
		ft in	2'5" / 1'5"	2'5" / 1'5"
B	Lifting height (max. / min.)	mm	759 / 461	765 / 465
		ft in	2'6" / 1'6"	2'6" / 1'6"
C	Additional length, attachment raised	mm	1,511	1,494
		ft in	4'11"	4'11"
D	Additional length, attachment lowered	mm	1,862	1,891
		ft in	6'1"	6'2"
E	Overall beam width	mm	2,184	2,184
		ft in	7'2"	7'2"
F	Distance between shanks	mm	1,000	1,000
		ft in	3'3"	3'3"
	Max. pitch adjustment		–	25°
	Weight	kg	3,323	3,334
		lb	7,326	7,350

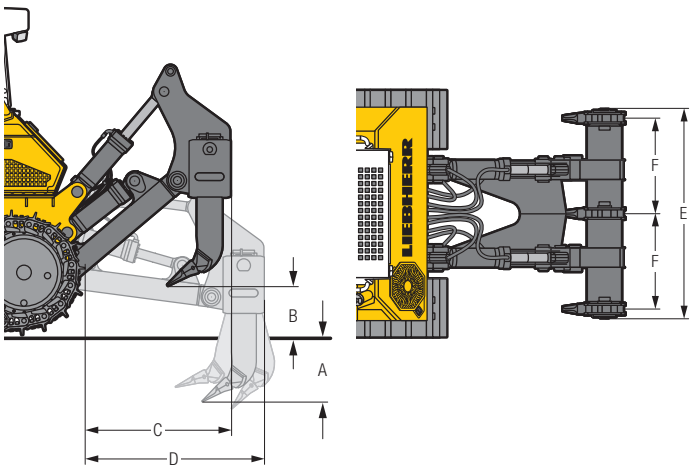

Technical Data PR 756

Engine

Liebherr Diesel engine	D 946 A7 Emission regulations according to 97/68/EC, 2004/26/EC stage IV, EPA/CARB Tier 4f
Rated power (net)	
ISO 9249	250 kW/340 HP
SAE J1349	250 kW/336 HP
Maximum power (net)	
ISO 9249	275 kW/374 HP
SAE J1349	275 kW/369 HP
Rated speed	1,600 rpm
Displacement	12 l/733 in³
Design	6 cylinder in-line engine, water-cooled, turbocharged, air-to-air intercooler
Injection system	Direct fuel injection, Common Rail, electronic control
Lubrication	Pressurized lube system, engine lubrication guaranteed for inclinations up to 45°, on all sides
Operating voltage	24 V
Alternator	140 A
Starter	7.8 kW/11 HP
Batteries	4 x 95 Ah/12 V
Air cleaner	Dry-type air cleaner with pre-cleaner, main and safety elements, control light in the operator's cab
Cooling system	Combi radiator, comprising radiators for water and charge air. Hydrostatic fan drive

Travel Drive, Control

Transmission system	Infinitely variable hydrostatic travel drive, independent drive for each track
Travel speed*	Continuously variable
Speed range 1 (reverse):	0 – 4.0 km/h/2.5 mph (4.5 km/h/2.8 mph)
Speed range 2 (reverse):	0 – 6.0 km/h/3.7 mph (8.0 km/h/4.9 mph)
Speed range 3 (reverse):	0 – 11.0 km/h/6.8 mph (11.0 km/h/6.8 mph)
	* Travel speed ranges can be set on the travel joystick (memory function)
Travel speed*	
Minimum speed setting:	0 – 1.0 mph
Maximum speed setting:	0 – 6.8 mph
Pre-set speed:	0 – 2.8 mph
	* Travel speeds can be set on the travel joystick
Electronic system	The electronic system automatically adjusts travel speed and drawbar pull to match changing load conditions
Steering	Hydrostatic
Service brake	Hydrostatic (self-locking), wear-free
Parking brake	Multi-disc brake, wear-free, automatically applied with neutral joystick position
Cooling system	Separate oil cooler, hydraulic fan drive
Filter system	Micro cartridge filter in replenishing circuit
Final drive	Combination spur gear with planetary gear, double-sealed (duo cone seals) with temperature indicator
Control	Single proportional joystick with inch brake pedal for all travel and steering functions

Hydraulics

Hydraulic system	Load sensing (demand-controlled)
Pump type	Swash plate piston pump
Pump flow, max.	256 l/min./67.6 gpm
Pressure limitation	260 bar/3,770 psi
Control valve	2 segments, expandable to 4
Filter system	Return filter with magnetic rod in the hydraulic tank
Control	Single joystick for all blade functions

Operator's Cab

Cab	Resiliently mounted cab with positive pressure ventilation, can be tilted with hand pump 40° to the rear. With integrated ROPS Rollover Protective Structure (EN ISO 3471) and FOPS Falling Objects Protective Structure (EN ISO 3449)
Operator's seat	Air suspended comfort seat, fully adjustable
Monitoring	Touch screen: display of current machine information, automatic monitoring of operating conditions, individual setting of machine parameters

Technical Data PR 756

Undercarriage

Design	Undercarriage with rigid bottom rollers or bogie suspension
Mounting	Via separate pivot shafts and equalizer bar
Track chains	Lubricated, single grouser shoes, tensioning via steel spring and grease tensioner
Links, each side	44
Track rollers, each side	7
Carrier rollers, each side	2
Sprocket segments, each side	5
Track shoes, standard	610 mm/24"
Track shoes, optional	560 mm/22", 711 mm/28"

Sound Emissions

Operator sound exposure ISO 6396	L_{pA} = 75 dB(A) (in the cab)
Exterior sound pressure 2000/14/EC	L_{WA} = 113 dB(A) (to the environment)

Refill Capacities

Fuel tank	660 l/174.4 gal
Diesel Exhaust Fluid (DEF) tank	80 l/ 21.1 gal
Cooling system	55 l/ 14.5 gal
Engine oil, with filters	43 l/ 11.4 gal
Splitter box	8.5 l/ 2.2 gal
Hydraulic tank	129 l/ 34.1 gal
Final drive, each side	20 l/ 5.3 gal

Drawbar Pull

Max.	578 kN
at 1.5 km/h / 0.9 mph	510 kN
at 3.0 km/h / 1.9 mph	257 kN
at 6.0 km/h / 3.7 mph	128 kN
at 9.0 km/h / 5.6 mph	86 kN

Dimensions PR 756

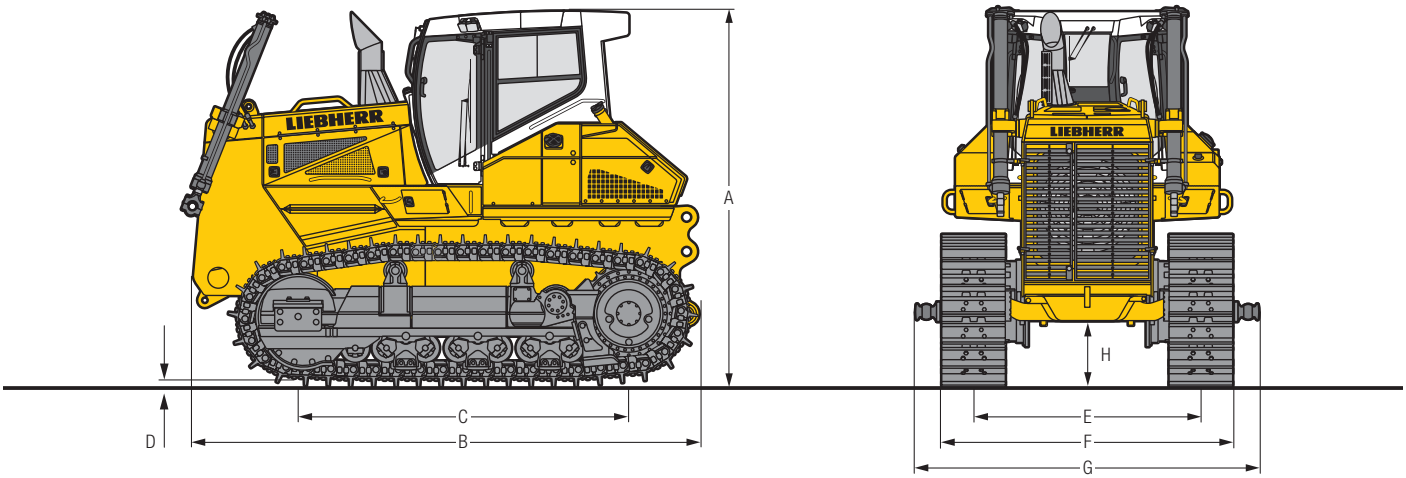

Dimensions

	Undercarriage		rigid bottom rollers	single bogie suspension
A	**Height over cab**	**mm**	3,605	
		ft in	11'10"	
B	**Overall length without attachments**	**mm**	4,885	
		ft in	16'0"	
C	**Length of track on ground**	**mm**	3,174	
		ft in	10'5"	
D	**Height of grousers**	**mm**	83	
		in	3.27"	
H	**Ground clearance**	**mm**	635	
		ft in	2'1"	
E	**Track gauge**	**mm**	2,180	
		ft in	7'2"	
G	**Width over trunnions**	**mm**	3,145	
		ft in	10'4"	
	Track shoes 560 mm / 22"			
F	Width over tracks	**mm / ft in**	2,740 / 9'	2,740 / 9'
	Tractor shipping weight [1]	**kg / lb**	28,806 / 63,506	29,733 / 65,550
	Track shoes 610 mm / 24"			
F	Width over tracks	**mm / ft in**	2,790 / 9'2"	2,790 / 9'2"
	Tractor shipping weight [1]	**kg / lb**	29,046 / 64,035	29,973 / 66,079
	Track shoes 711 mm / 28"			
F	Width over tracks	**mm / ft in**	2,891 / 9'6"	2,891 / 9'6"
	Tractor shipping weight [1]	**kg / lb**	29,523 / 65,087	30,450 / 67,131

[1] Including coolant and lubricants, 20 % fuel, ROPS/FOPS cab.

Front Attachments PR 756

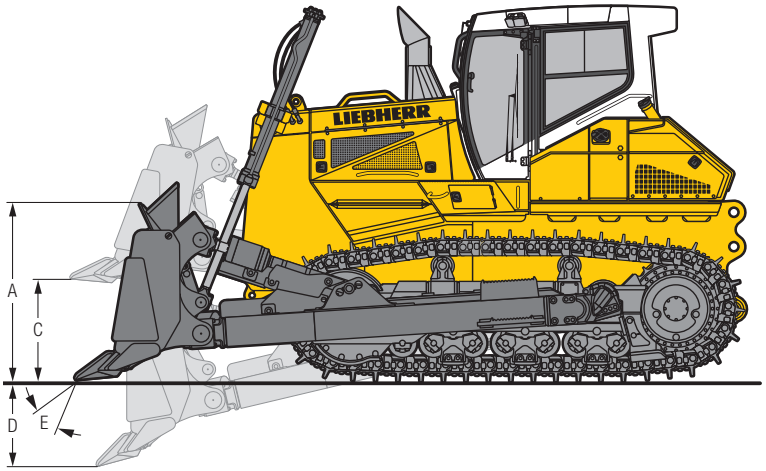

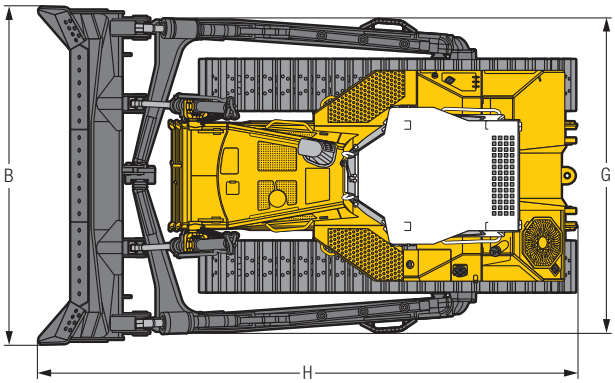

Semi-U Blade

	Undercarriage		rigid bottom rollers	single bogie suspension
	Blade capacity, ISO 9246	**m³**	8.92	
		yd³	11.67	
A	**Height of blade**	**mm**	1,650	
		ft in	5'5"	
B	**Width of blade**	**mm**	4,044	
		ft in	13'3"	
C	**Lifting height**	**mm**	1,372	
		ft in	4'6"	
D	**Digging depth**	**mm**	570	
		ft in	1'10"	
E	**Blade pitch adjustment**		10°	
	Max. blade tilt	**mm**	570	
		ft in	1'10"	
G	**Width over push frame**	**mm**	3,776	
		ft in	12'5"	
H	**Overall length**	**mm**	6,449	
		ft in	21'2"	
	Track shoes 560 mm / 22"			
	Operating weight [1]	**kg / lb**	35,088 / 77,356	36,015 / 79,399
	Ground pressure [1]	**kg/cm² / psi**	0.99 / 14.08	1.01 / 14.36
	Track shoes 610 mm / 24"			
	Operating weight [1]	**kg / lb**	35,328 / 77,885	36,255 / 79,928
	Ground pressure [1]	**kg/cm² / psi**	0.91 / 12.94	0.94 / 13.37
	Track shoes 711 mm / 28"			
	Operating weight [1]	**kg / lb**	35,805 / 78,936	36,732 / 80,980
	Ground pressure [1]	**kg/cm² / psi**	0.79 / 11.23	0.81 / 11.52

[1] Including coolant and lubricants, 100 % fuel, ROPS/FOPS cab, semi-U blade, operator.

Front Attachments PR 756

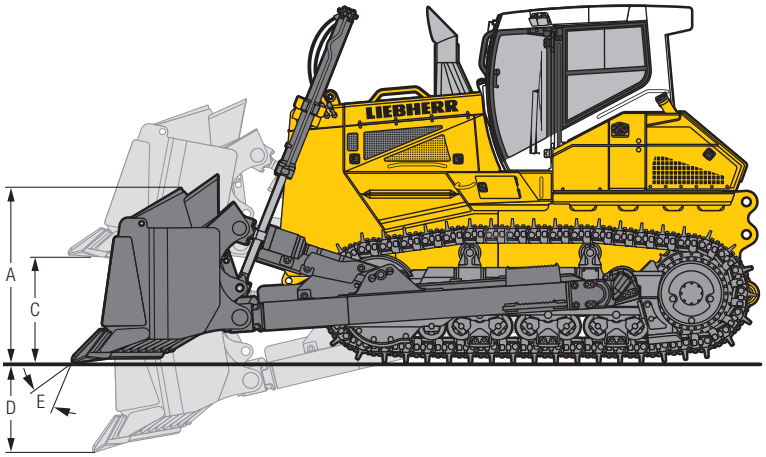

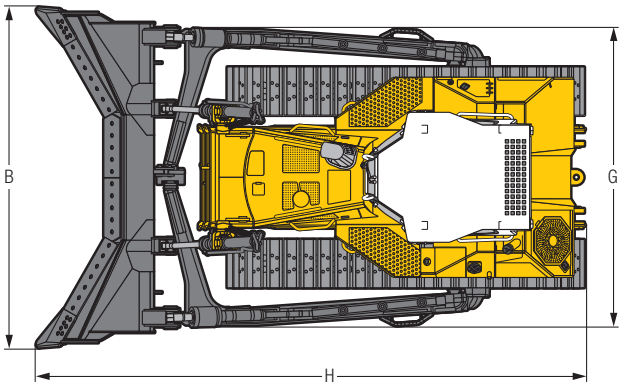

U Blade

	Undercarriage		rigid bottom rollers	single bogie suspension
	Blade capacity, ISO 9246	**m³**	11.8	
		yd³	15.43	
A	**Height of blade**	**mm**	1,700	
		ft in	5'7"	
B	**Width of blade**	**mm**	4,281	
		ft in	14'1"	
C	**Lifting height**	**mm**	1,360	
		ft in	4'6"	
D	**Digging depth**	**mm**	566	
		ft in	1'10"	
E	**Blade pitch adjustment**		10°	
	Max. blade tilt	**mm**	604	
		ft in	2'	
G	**Width over push frame**	**mm**	3,776	
		ft in	12'5"	
H	**Overall length**	**mm**	6,872	
		ft in	22'7"	
	Track shoes 560 mm / 22"			
	Operating weight [1]	**kg / lb**	35,058 / 77,290	35,985 / 79,333
	Ground pressure [1]	**kg/cm² / psi**	0.99 / 14.08	1.01 / 14.36
	Track shoes 610 mm / 24"			
	Operating weight [1]	**kg / lb**	35,298 / 77,819	36,225 / 79,862
	Ground pressure [1]	**kg/cm² / psi**	0.91 / 12.94	0.94 / 13.37
	Track shoes 711 mm / 28"			
	Operating weight [1]	**kg / lb**	35,775 / 78,870	36,702 / 80,914
	Ground pressure [1]	**kg/cm² / psi**	0.79 / 11.23	0.81 / 11.52

[1] Including coolant and lubricants, 100 % fuel, ROPS/FOPS cab, U blade, operator.

Rear Attachments PR 756

1-Shank Ripper

	Parallelogram		hydraulic pitch adjustment
A	Ripping depth (max. / min.)	mm	1,203 / 423
		ft in	3'11" / 1'5"
B	Lifting height (max. / min.)	mm	1,040 / 260
		ft in	3'5" / 0'10"
C	Additional length, attachment raised	mm	1,820
		ft in	6'
D	Additional length, attachment lowered	mm	2,374
		ft in	7'9"
E	Overall beam width	mm	1,370
		ft in	4'6"
F	Distance between shanks	mm	–
		ft in	
	Max. pitch adjustment		31°
	Max. penetration force	kN	123.9
		lbf	27,854
	Max. pryout force	kN	208.8
		lbf	46,940
	Weight	kg	3,638
		lb	8,020

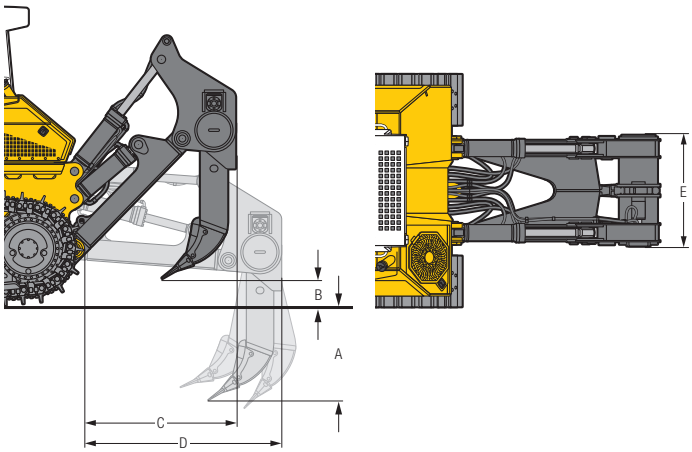

3-Shank Ripper

	Parallelogram		hydraulic pitch adjustment
A	Ripping depth (max. / min.)	mm	796 / 481
		ft in	2'7" / 1'7"
B	Lifting height (max. / min.)	mm	982 / 667
		ft in	3'3" / 2'2"
C	Additional length, attachment raised	mm	1,820
		ft in	6'
D	Additional length, attachment lowered	mm	2,373
		ft in	7'9"
E	Overall beam width	mm	2,434
		ft in	8'
F	Distance between shanks	mm	1,100
		ft in	3'7"
	Max. pitch adjustment		31°
	Max. penetration force	kN	131.8
		lbf	29,630
	Max. pryout force	kN	208.8
		lbf	46,940
	Weight	kg	4,821
		lb	10,628

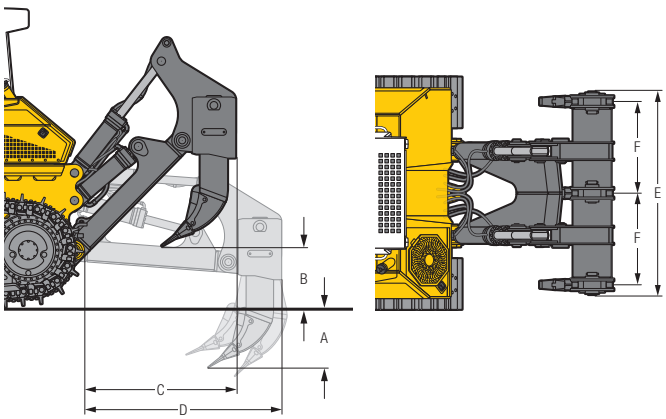

Equipment

Base Machine

	736	746	756
Additional handle on cab footstep	+	+	+
Additional handle on fuel tank	+	+	+
Air filter with automatic dust ejector	•	•	•
Air filter, dry type, dual step	•	•	•
Air pre-cleaner Top Air	+	+	+
Auto Idle	+	+	+
Automatic engine shut-off	+	+	+
Battery compartment, lockable	•	•	•
Coal arrangement	+	+	+
Cold environment arrangement	+	+	+
Cooling fan front, tilt-out	•	•	•
Cooling fan rear, tilt-out	–	•	•
Cooling fan, hydraulically driven	•	•	•
Cooling fan, reversible	+	+	+
Diesel Exhaust Fluid (DEF) tank, lockable	•	•	•
Engine compartment doors, lockable	•	•	•
Forestry arrangement	+	+	+
Fuel pre-filter	•	•	•
Fuel pre-filter, with electric heater	+	+	+
Fuel water separator	•	•	•
Fuel water separator, with electric heater	+	+	+
Grade control ready kit	+	1)	1)
Landfill arrangement	+	+	+
LiDAT – Data transmission system	•	•	•
Liebherr diesel engine emission stage IV/Tier 4f	•	•	•
Liebherr hydraulic oil, biologically degradable	+	+	+
Lugs for crane lifting, front	•	•	•
Lugs for crane lifting, rear	+	+	+
Radiator guard, heavy duty	+	+	+
Radiator guard, hinged	•	•	•
Radiator, wide-meshed	•	•	•
Refuelling pump, electric	+	+	+
Special paint scheme	+	+	+
Tool kit, basic	•	•	•
Tool kit, extended	+	+	+
Towing hitch rear	•	•	•
Towing lug front	•	•	•
Woodchip arrangement	+	+	+

Hydraulics System

	736	746	756
Blade float function	•	•	•
Blade quick drop function	•	•	•
Control block for 2 circuits	•	•	•
Hydraulic kit for ripper	+	+	+
Hydraulic kit for winch	+	+	+
Oil filter in hydraulic tank	•	•	•
Variable flow pump, load-sensing	•	•	•

Travel Drive

	736	746	756
Emergency stop	•	•	•
Final drives planetary gear	•	•	•
Inching brake pedal	•	•	•
Load limit control, electronic	•	•	•
Machine-release switch	•	•	•
Parking brake, automatic	•	•	•
Seat contact switch	•	•	•
Travel control, 3 speed ranges	•	•	•
Travel drive joystick, detended	•	•	•
Travel drive joystick, proportional	+	+	+
Travel drive, hydrostatic	•	•	•

Operator's Cab

	736	746	756
Additional control panel for air conditioning on side console	+	+	+
Air-conditioner	•	•	•
Armrests 3D adjustable	•	•	•
Cab heating	•	•	•
Coat hook	•	•	•
Dome light	•	•	•
Extension of cab door footstep	+	+	–
Fire extinguisher	•	•	•
Footrest on the right side of the front console	+	+	+
Joysticks, longitudinally adjustable	•	•	•
Operator's seat Comfort, air-suspended	•	•	•
Operator's seat Premium, air-suspended	+	+	+
Pressurised cab	•	•	•
Protective grid for rear window	+	+	+
Radio	+	+	+
Radio preparation kit	•	•	•
Rear-view camera	+	+	+
Rear-view mirror, inside	•	•	•
Rear-view mirrors, external	+	+	+
ROPS/FOPS integrated	•	•	•
Safety glass tinted	•	•	•
Sliding window left	•	•	•
Sliding window right	+	+	+
Socket 12 V	•	•	•
Stowage compartment, air-conditioned	•	•	•
Sun visor, front	+	+	+
Tiltable cab	•	•	•
Touch-controlled color display	•	•	•
Windshield washer system	•	•	•
Windshield wipers front, rear, doors, with intermittent function	•	•	•

• = Standard, + = Option, – = not available, 1) on demand at your dealer

Equipment

Electrical System

	736	746	756
1 additional working light on each lift cylinder	+	+	+
1 additional working light on the ripper	–	–	+
1 working light on each lift cylinder	•	•	•
2 additional working light on the cab, rear	+	+	+
2 cold start batteries	•	•	•
2 working lights on the cab, rear	•	•	•
4 working light on the cab, front	•	•	•
All working lights in LED version	+	+	+
Back-up alarm	•	•	•
Back-up alarm, acoustic and visual	+	+	+
Battery main switch	•	•	•
Battery main switch, lockable	+	+	+
Beacon	+	+	+
Horn	•	•	•
Immobiliser, electronic	+	+	+
On-board voltage 24 V	•	•	•
Socket 24 V	•	•	•

Undercarriage

	736	746	756
Master link, two-piece	•	•	•
Sprocket segments with recesses	+	+	+
Sprocket segments, bolted	•	•	•
Track frame, closed	•	•	•
Track guard, full length (with rigid bottom rollers)	+	+	+
Track guide (undercarriage with single bogie suspension)	–	–	•
Track guide centre part (with rigid bottom rollers)	+	+	+
Track guide, front and rear (with rigid bottom rollers)	•	•	•
Track pads with mud holes	+	+	+
Track shoes, heavy duty	1)	+	•
Track shoes, moderate service	•	•	–
Tracks, oil-lubricated	•	•	•
Undercarriage L	+	+	–
Undercarriage LGP	+	+	1)
Undercarriage with rigid bottom rollers	•	•	•
Undercarriage with rotary bushings FTB	+	–	–
Undercarriage with single-bogie suspension	–	–	+
Undercarriage XL	+	–	+

Attachments Front

	736	746	756
6-way blade	+	–	–
6-way blade with hinged corners	+	–	–
Guards for hydraulic cylinders, 6-way blade	+	–	–
Guards for hydraulic cylinders, semi-U blade	–	–	+
Hydraulic pitch angle adjustment	–	+	+
Mechanical angle blade	+	+	+
Semi-U blade	+	+	+
Spill plate	+	+	+
Straight blade	+	+	1)
Trash rack	+	+	+
U blade	1)	1)	+
Wear plates on push frame	+	+	+
Wear plates on semi-U blade	+	+	+

Attachments Rear

	736	746	756
Counterweight, rear	+	+	+
Drawbar rear, rigid	+	+	+
Mounting plate for third-party arrangement	+	+	+
Ripper, 1 shank	+	+	+
Ripper, 1 shank with hydraulic pin puller	–	–	+
Ripper, 3 shank	+	+	+
Winch	+	+	+

• = Standard, + = Option, – = not available, 1) on demand at your dealer

Options and/or special attachments, supplied by vendors other than Liebherr, are only to be installed with the knowledge and approval of Liebherr in order to retain warranty.

Printed in Germany by Schirmer RG-BK-RP LWT/VM 11825893-1-02.16_enUS

Liebherr Construction Equipment Co.
4100 Chestnut Avenue, Newport News, VA 23607, USA
☎ +1 (757) 245 5251, Fax +1 (757) 928 8701
www.liebherr.us, E-Mail: info.lce@liebherr.com
www.facebook.com/LiebherrConstruction